DMK 456

Pressure Transmitter with Stainless Steel Field Housing

Special application:
Marine and Offshore

accuracy according to IEC 61298-2:
standard: 0.25 % FSO
option: 0.1 % FSO



Nominal pressure

from 0 ... 40 mbar up to 0 ... 20 bar

Output signals

2-wire: 4 ... 20 mA
others on request

Product characteristics

- LR-certificate (Lloyd´s Register)
- DNV-approval (Det Norske Veritas)
- ABS-certificate
  (American Bureau of Shipping)
- CCS-certificate
  (China Classification Society)
- diaphragm ceramics Al_2O_3 99.9 %
- stainless steel field housing
- IS-version (temperature class T6)
  Ex ia = intrinsically safe for gases
- high overpressure resistance

Optional versions

- different inch threads and
  flush versions

The pressure transmitter DMK 456 has been developed for measuring the pressure in systems and the level in tanks and is certificated for shipbuilding and offshore applications.

Due robust stainless steel field housing and the possibility to use the device in intrinsic safe areas (temperature class T6) enable to measure the pressure of aggressive gases and fluids under extreme operating conditions. The basis for the DMK 456 is a capacitive ceramic sensor element designed by BD|SENSORS, which offers a high overload resistance and medium compatibility.

Preferred areas of use are

- Monitoring of the pressure during loading and unloading processes
- Monitoring of a ship's position and draught
- Use in anti-heeling systems
- Level measurement in ballast and storage tanks
- Monitoring of the internal pressure in liquid gas cargo tanks

BD SENSORS GmbH
BD-Sensors-Straße 1
D - 95199 Thierstein

Tel.: +49 (0) 92 35 / 98 11- 0
Fax: +49 (0) 92 35 / 98 11- 11

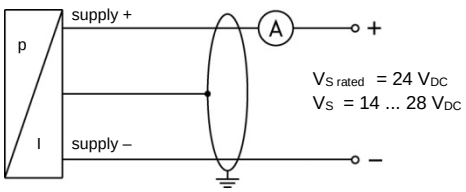
www.bdsensors.de
info@bdsensors.de

Pressure ranges																
Nominal pressure [1]	[bar]	0.04	0.06	0.1	0.16	0.25	0.4	0.6	1	1.6	2.5	4	6	10	16	20
Level	[mH_2O]	0.4	0.6	1	1.6	2.5	4	6	10	16	25	40	60	100	160	200
Permissible overpressure	[bar]	2	2	4	4	6	6	8	8	15	25	25	35	35	45	45
Permissible vacuum	[bar]	-0.2		-0.3		-0.5				-1						
[1] available in gauge and absolute; nominal pressure ranges absolute from 1 bar																

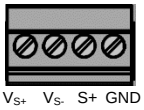
Output signal / Supply		
Standard	IS-version 4 ... 20 mA / 2-wire	V_S = 14 ... 28 V_{DC} $V_{S\ rated}$ = 24 V_{DC}
Performance		
Accuracy [2]	standard: ≤ ± 0.25 % FSO option for P_N ≥ 0.6 bar [3]: ≤ ± 0.1 % FSO	
Permissible load	R_{max} = [(V_S – $V_{S\ min}$) / 0.02 A] Ω	
Long term stability	≤ ± 0.1 % FSO / year at reference conditions	
Influence effects	supply: 0.05 % FSO / 10 V	load: 0.05 % FSO / kΩ
Turn-on time	700 msec	
Mean response time	< 200 msec	mean measuring rate 5/sec
Max. response time	380 msec	
[2] accuracy according to IEC 61298-2 – limit point adjustment (non-linearity, hysteresis, repeatability)		
[3] under the influence of disturbance burst according to EN 61000-4-4 (2004) +2 kV accuracy decreased to ≤ ± 0.25 % FSO		
Thermal effects (offset and span)		
Tolerance band	≤ ± 1 % FSO	
In compensated range	-20 … 80 °C	
Permissible temperatures		
Medium	-25 … 125 °C	
Electronics / environment	-25 … 85 °C	
Storage	-40 … 100 °C	
Electrical protection		
Short-circuit protection	permanent	
Reverse polarity protection	no damage, but also no function	
Electromagnetic compatibility	emission and immunity according to - EN 61326 - DNV (Det Norske Veritas)	
Mechanical stability		
Vibration	4 g (according to DNV: class B, curve 2 / basis: IEC 60068-2-6)	
Materials		
Pressure port	stainless steel 1.4404 (316 L)	
Housing	stainless steel 1.4404 (316 L)	
Cable gland	brass, nickel plated others on request	
Seals	FKM others on request	
Diaphragm	ceramics Al_2O_3 99.9 %	
Media wetted parts	pressure port, seals, diaphragm	
Category of the environment		
Lloyd´s Register (LR)	EMV1, EMV2, EMV4	number of certificate: 13/20055
Det Norske Veritas (DNV)	temperature: D humidity: B vibration: B electromagnetic compatibility: B enclosure: D	number of certificate: TAA00001GR
Explosion protection		
Approval DX14A-DMK 456	IBExU07ATEX1180 X zone 0: II 1G Ex ia IIC T6 Ga	
Safety techn. maximum values	U_i = 28 V, I_i = 93 mA, P_i = 660 mW, C_i = 52.3 nF, L_i = 0 µH, the supply connections have an inner capacity of max. 90.2 nF opposite the enclosure	
Permissible temperatures for environment	-20 ... 60 °C	
Miscellaneous		
Ingress protection	IP 67	
Installation position	any	
Current consumption	max. 21 mA	
Weight	min. 400 g (depending on housing and mechanical connection)	
Operational life	100 million load cycles	
CE conformity	EMC Directive: 2014/30/EU	
ATEX Directive	2014/34/EU	

Wiring diagram

2-wire-system (current)

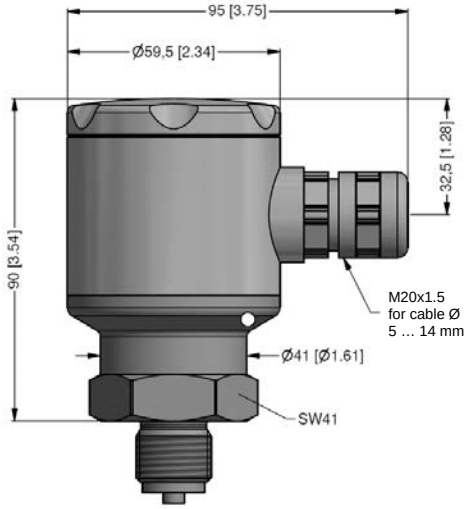


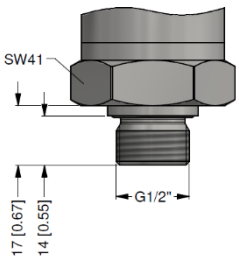
Pin configuration

Electrical connections	field housing (clamp section: 2.5 mm²)
	
	V_{S+} V_{S-} S+ GND
Supply +	VS+
Supply –	VS-
Ground	GND

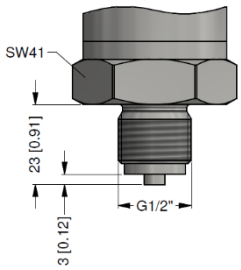
Dimensions (mm / in)

inch thread

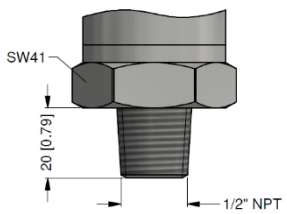




G1/2" 3852

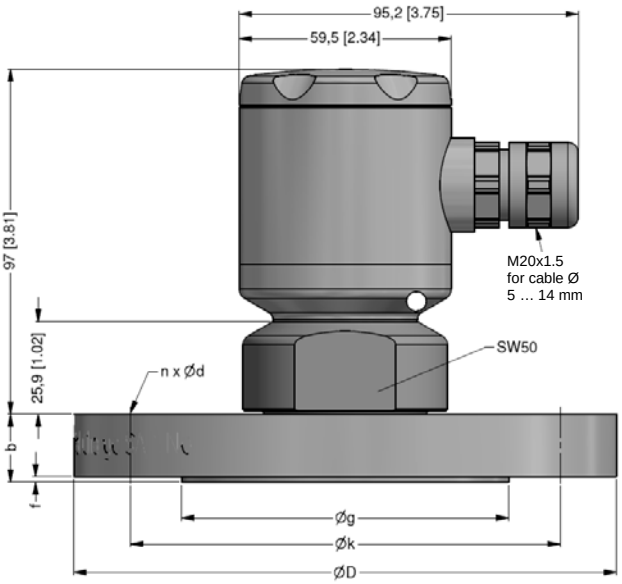


G1/2" EN 837



1/2" NPT

flange



dimensions in mm					
	DIN 2501			ANSI	
size	DN25/PN40	DN50/PN40	DN80/PN16	2"/150 lbs	3"/150 lbs
b	18	20	20	19.1	23.9
d	14	18	18	19.1	19.1
D	115	165	200	152.4	190.5
f	2	3	3	2	2
g	68	102	138	91.9	127
k	85	125	160	120.7	152.4
n	4	4	8	4	4
p_N [bar]	≤ 40	≤ 40	≤ 16	≤ 10	≤ 10

© 2025 BD|SENSORS GmbH – The specifications given in this document represent the state of engineering at the time of publishing. We reserve the right to make modifications to the specifications and materials.

Tel.: +49 (0) 92 35 / 98 11- 0
Fax: +49 (0) 92 35 / 98 11- 11
www.bdsensors.de
info@bdsensors.de
BD|SENSORS pressure measurement

BD|SENSORS
pressure measurement

Ordering code DMK 456

DMK 456 □□□-□□□□-□-□-□□□-□□□-□-□-□-□□□

| | | |